EE C128 / ME C134 – Feedback Control Systems

Lecture – Chapter 3 – Modeling in the Time Domain

Alexandre Bayen

Department of Electrical Engineering & Computer Science
University of California Berkeley

September 10, 2013

Lecture abstract

Topics covered in this presentation

- System variables: states, inputs, outputs, & measurements
- Linear independence
- State space representation
- Conversion between systems in time-, frequency-domain, TF, & state space representations

Chapter outline

SS representation, [1, p. 119]

Procedure

1. *System variables:* Select a subset of all possible system variables as states and determine inputs & outputs.
2. *State differential equations:* Write n simultaneous, first-order DEs of the states in terms of the states and inputs for an nth-order system.
3. *Initial conditions:* If we know the initial conditions of all the states at t_0 as well as the inputs for $t \geq t_0$, we can solve the simultaneous DEs for the states for $t \geq t_0$.
4. *Output-state relation equations:* Write linear relations of the outputs in terms of the states and inputs for $t \geq t_0$.
5. *State space (SS) representation:* The state and output equations represent a viable representation of the system.

Size of system states, inputs & outputs, [1, p. 122]

- *States:* Typically the minimum number of states required to describe a system equals the order of the system DE. We can define more states than the minimum set; however, within this minimal set the states must be *linearly independent* (defined later).
- *Inputs & outputs:* Single-input, single-output (SISO) systems are a unique case of general multiple-input, multiple-output (MIMO) systems. The output and input of a SISO system are represented by scalar quantities. The outputs and inputs of a MIMO system are represented by vector quantities.

Motivational example, [1, p. 120]

Example (RLC system in SS representation)

A quick example to introduce the terminology and concept before we generalize the definition of SS representation.

1. *System variables*
   - States
     - Current through the RLC loop, $i(t)$
     - Capacitor charge, $q(t)$
   - Input
     - Voltage, $v(t)$
   - Output
     - Inductor voltage, $v_L(t)$

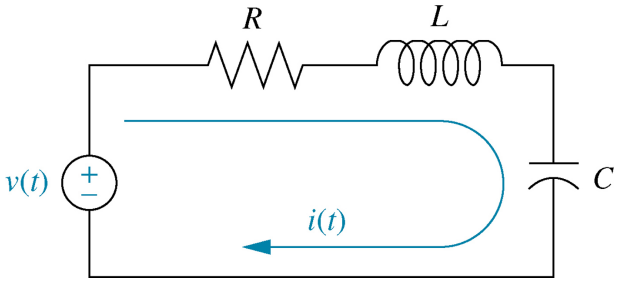

Motivational example, [1, p. 120]

Example (RLC system in SS representation)

2. *State differential equations*
   - Kirchhoff's voltage law

$$L\frac{di(t)}{dt} + Ri(t) + \frac{1}{C}\int i(t)dt = v(t)$$

   - Charge definition

$$i(t) = \frac{dq(t)}{dt}$$

   - Two simultaneous, first-order DEs

$$\frac{dq(t)}{dt} = i(t)$$
$$\frac{di(t)}{dt} = -\frac{1}{LC}q(t) - \frac{R}{L}i(t) + \frac{1}{L}v(t)$$

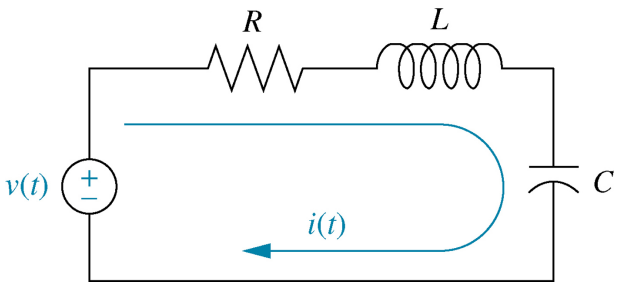

Motivational example, [1, p. 120]

Example (RLC system in SS representation)

3. *Initial conditions*
   - Assume we know the initial conditions of the states at t_0 and the input for $t \geq t_0$

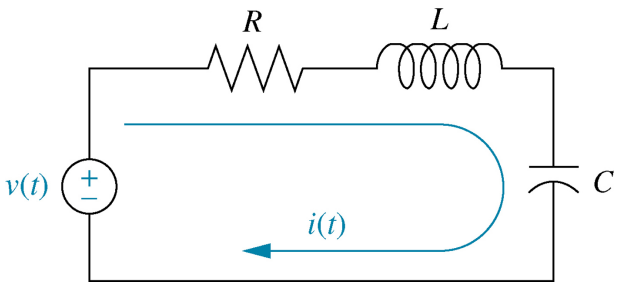

Figure: RLC system

Motivational example, [1, p. 120]

Example (RLC system in SS representation)

4. *Output-state relation equations*

$$v_L(t) = -\frac{1}{C}q(t) - Ri(t) + v(t)$$

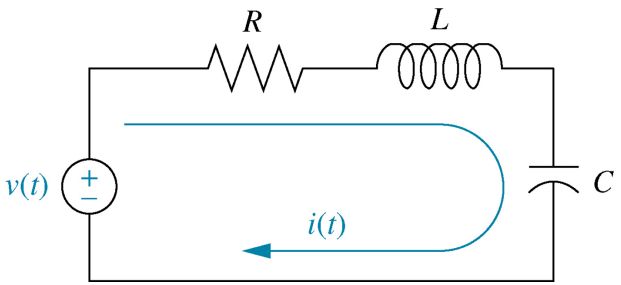

Figure: RLC system

Motivational example, [1, p. 120]

Example (RLC system in SS representation)

5. *SS representation*

$$x = \begin{bmatrix} q(t) \\ i(t) \end{bmatrix}; \quad u = v(t)$$

$$\dot{x} = Ax + Bu$$

$$A = \begin{bmatrix} 0 & 1 \\ -\frac{1}{LC} & -\frac{R}{L} \end{bmatrix}; \quad B = \begin{bmatrix} 0 \\ \frac{1}{L} \end{bmatrix}$$

$$y = Cx + Du$$

$$C = \begin{bmatrix} -\frac{1}{C} & -R \end{bmatrix}; \quad D = 1$$

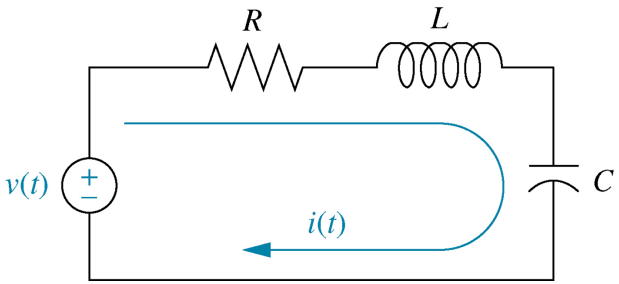

Figure: RLC system

Definitions, [1, p. 123]

- *Linear combination:* A linear combination of n variables, x_i, for $i = 1$ to n, is given by the following sum, S

$$S = K_n x_n + K_{n-1} x_{n-1} + ... + K_1 x_1$$

  where each K_i is a constant.
- *Linear independence:* None of the variables can be written as a linear combination of the others. Variables x_i, for $i = 1$ to n, are said to be linearly independent if their linear combination, S, equals zero only if every $K_i = 0$ and no $x_i = 0$ for all $t > 0$.

Definitions, [1, p. 123]

- *System variable:* Any variable that responds to an input or initial condition in a system.
- *State:* The state variables are a *non-unique* set of linearly independent system variables such that the values of the members of the set at time t_0 along with known inputs completely determine the value of all system variables for all $t > t_0$.
- *State vector:* A vector whose elements are the states.
- *State space:* The n-dimensional space whose axes are the states. A trajectory can be thought of as being mapped out by the state vector, $x(t)$, for a range of t.

Equations, [1, p. 123]

- *State equation:* A set of n simultaneous, first-order DEs that expresses the time derivatives of the n states of a system as linear combinations of the states and inputs.

$$\dot{x} = Ax + Bu$$

$$x = \begin{bmatrix} x_1 \\ \vdots \\ x_n \end{bmatrix}; u = \begin{bmatrix} u_1 \\ \vdots \\ u_m \end{bmatrix}; A = \begin{bmatrix} a_{1,1} & \dots & a_{1,n} \\ \vdots & \ddots & \vdots \\ a_{n,1} & \dots & a_{n,n} \end{bmatrix}; B = \begin{bmatrix} b_{1,1} & \dots & b_{1,m} \\ \vdots & \ddots & \vdots \\ b_{n,1} & \dots & b_{n,m} \end{bmatrix}$$

Equations, [1, p. 123]

- *Output equation:* An equation that expresses the measured output variables of a system as linear combinations of the states and inputs.

$$y = Cx + Du$$

$$y = \begin{bmatrix} y_1 \\ \vdots \\ y_p \end{bmatrix}; C = \begin{bmatrix} c_{1,1} & \dots & c_{1,n} \\ \vdots & \ddots & \vdots \\ c_{p,1} & \dots & c_{p,n} \end{bmatrix}; D = \begin{bmatrix} d_{1,1} & \dots & d_{1,m} \\ \vdots & \ddots & \vdots \\ d_{p,1} & \dots & d_{p,m} \end{bmatrix}$$

Variables & their dimensions, [1, p. 123]

$\dot{x} \in \mathbb{R}^n$	time derivative of state vector
$x \in \mathbb{R}^n$	state vector
$u \in \mathbb{R}^m$	control input vector
$y \in \mathbb{R}^p$	measured output vector
$A \in \mathbb{R}^{n \times n}$	system matrix
$B \in \mathbb{R}^m$	input matrix
$C \in \mathbb{R}^{p \times n}$	output matrix
$D \in \mathbb{R}^{p \times m}$	feedforward matrix

Selecting the states, [1, p. 124]

State requirements

- The states must be linearly independent.
- A minimum number of states must be selected and must be sufficient to describe completely the state of the system. Typically the number required equals the sum of the orders of a set of DEs describing the system.

If

- too few states are selected or
- a minimum number of states are selected and are linearly dependent,

it may be impossible to completely express state and output equations as linear combinations of the states and inputs.

Selecting the states, [1, p. 124]

Notes concerning adding states to the minimal set of linear independent states

- *Linear independent states:* These additional linear independent states are also decoupled, i.e., they are not required in order to solve for any of the other linearly independent states or any other dependent system variable.
- *Linear dependent states:* The dimension of the system matrix is increased unnecessarily, adding difficulty to the solution of the state vector [1, Ch. 4] and hindering the designer's ability to use state space methods for design [1, Ch. 12].

Representing an electrical system, [1, p. 126]

Example (RLC system)

- *Problem:* Find a state-space representation in vector-matrix form if the states are the capacitor voltage, v_C, and the inductor current, i_L, and the input is the applied voltage, v, and the output is the resistor current, i_R
- *Solution:* On board

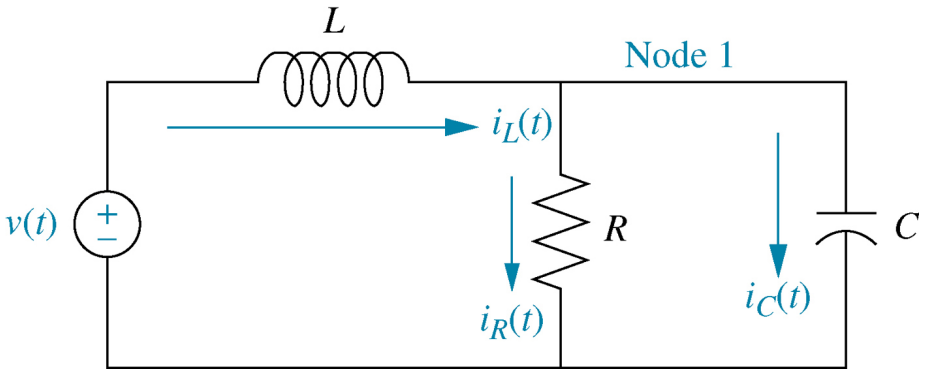

Figure: Electrical system

Representing a translational mechanical system, [1, p. 130]

Example (translational inertia-spring-damper system)

- *Problem:* Find the state equations in vector-matrix form if the states are the positions, x_1 and x_2, and the input is the applied force, f
- *Solution:* On board

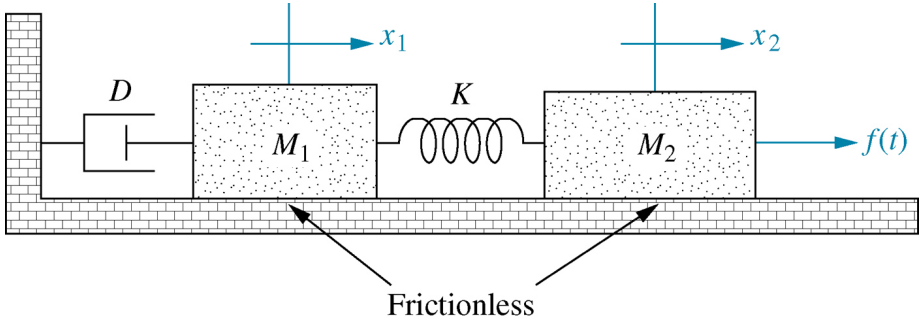

Figure: Translational mechanical system

Phase-variable representation, [1, p. 132]

Select a set of state variables, called *phase variables*, where each subsequent state variable is defined to be the derivative of the previous state variable.

$$\frac{d^n y}{dt^n} + a_{n-1}\frac{d^{n-1}y}{dt^{n-1}} + \ldots + a_1\frac{dy}{dt} + a_0 y = b_0 u$$

$$\begin{aligned}
x_1 &= y & \dot{x}_1 &= x_2 \\
x_2 &= \frac{dy}{dt} & \dot{x}_2 &= x_3 \\
&\vdots & &\vdots \\
x_{n-1} &= \frac{d^{n-2}y}{d^{n-2}t} & \dot{x}_{n-1} &= x_n \\
x_n &= \frac{d^{n-1}y}{d^{n-1}t} & \dot{x}_n &= -a_0 x_1 - a_1 x_2 - \ldots - a_{n-1}x_n + b_0 u
\end{aligned}$$

Phase-variable representation, [1, p. 132]

$$\dot{x} = \begin{bmatrix} 0 & 1 & 0 & \dots & 0 \\ 0 & 0 & 1 & \dots & 0 \\ \vdots & & & & \\ 0 & 0 & 0 & \dots & 1 \\ -a_0 & -a_1 & -a_2 & \dots & -a_{n-1} \end{bmatrix} x + \begin{bmatrix} 0 \\ 0 \\ \vdots \\ 0 \\ b_0 \end{bmatrix} u$$

$$y = \begin{bmatrix} 1 & 0 & \dots & 0 \end{bmatrix} x$$

Phase-variable representation, [1, p. 134]

Example (arbitrary system)

- *Problem:* Find the state-space representation in vector-matrix form for the transfer function from $R(s)$ to $C(s)$
- *Solution:* On board

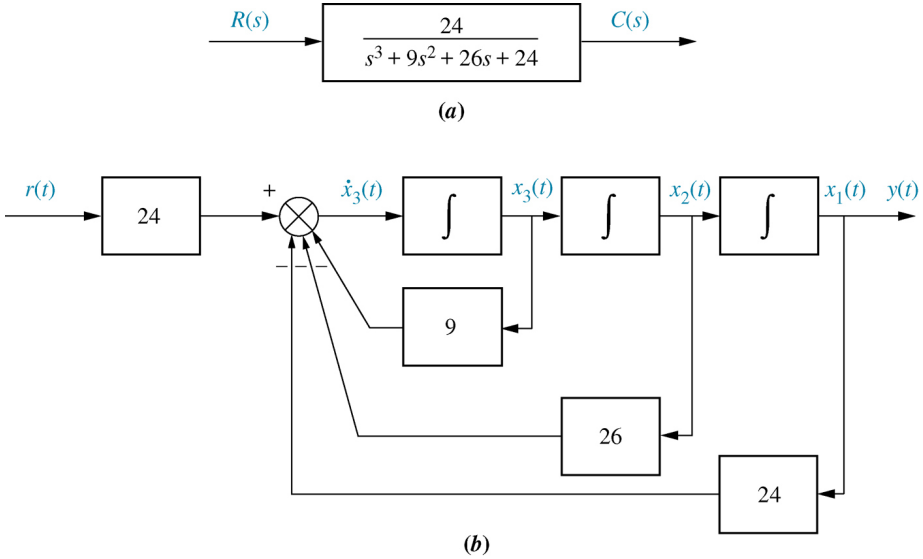

Figure: a. TF; b. equivalent block diagram showing phase variables. Note: $y(t) = c(t)$.

Converting from SS to a TF, [1, p. 139]

State and output equations

$$\dot{x} = Ax + Bu$$
$$y = Cx + Du$$

Laplace transform *assuming zero initial conditions*

$$sX(s) = AX(s) + BU(s)$$
$$Y(s) = CX(s) + DU(s)$$

Transfer function matrix

$$T(s) = \frac{Y(s)}{U(s)} = C(sI - A)^{-1}B + D$$

Bibliography

Norman S. Nise. *Control Systems Engineering*, 2011.