EE C128 / ME C134 – Feedback Control Systems

Lecture – Chapter 13 – Digital Control Systems

Alexandre Bayen

Department of Electrical Engineering & Computer Science
University of California Berkeley

September 10, 2013

Lecture abstract

Topics covered in this presentation

- Important considerations in CT-to-DT conversion that yield errors
- z-transform & its inverse
- 2 CT-to-DT conversion methods
- DT region of stability
- DT RL
- DT TR characteristics
- Designing DT compensators in CT

Chapter outline

Intro, [1, p. 724]

Concept

- Only frequency-domain analysis & design
- Not state-space techniques
- TFs built with analog components $\rightarrow$ digital computer that performs calculations that emulate the physical compensator

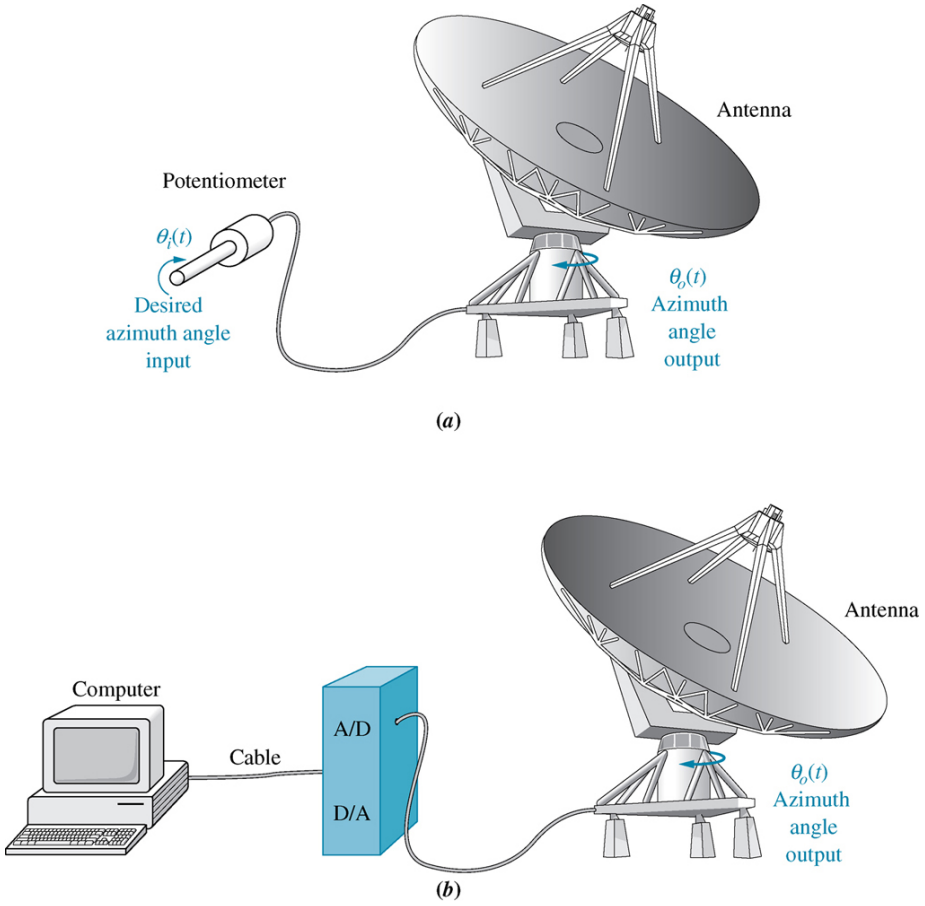

Figure: a. analog; b. digital

Definitions, [1, p. 724]

- *Analog:* CT, dynamic variables retain a particular value for only an infinitesimally short amount of time
- *Digital:* DT, dynamic variables evolve in between computer measurements of outputs & control inputs, but the computer remain unchanged throughout each non-zero period of sampling time

Digital control implementation, [1, p. 725]

Concept

- *Digital computer*
  - Control of multiple loops at the same time
  - Signals are sampled at specified intervals & held
    - Δsystem performance $\propto \Delta\omega_{\text{sample}}$
- *A/D converter:* Measured outputs sampler
  - 2-step process
    1. Analog signal $\rightarrow$ sampled signal
    2. Sampled signal $\rightarrow$ sequence of binary numbers
  - Not instantaneous, i.e, there is a delay
  - $\omega_{\text{sample}} > \omega_{\text{Nyquist}} = 2\omega_{BW}$
- *D/A converter:* Control inputs zero-order hold
  - Instantaneous

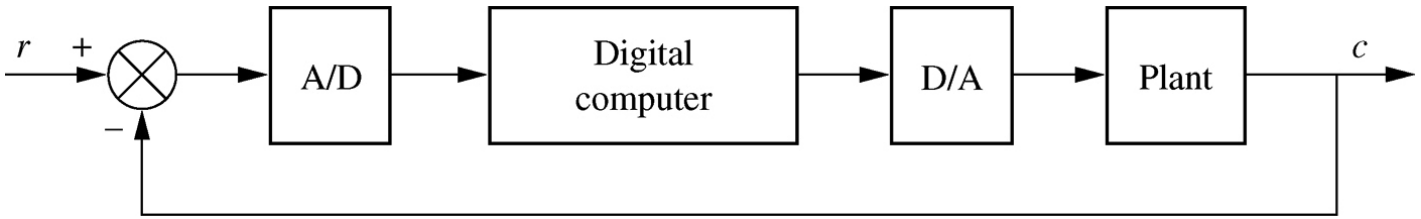

Figure: Digital computer with A/D & D/A converters

Modeling the sampler, [1, p. 728]

Concept

- *z-transform:* Laplace transform replacement for sampled signals
- Sampled waveform

$$f^*_{T_W}(t) = f(t)s(t)$$
$$= f(t) \sum_{k=-\infty}^{\infty} [u(t-kT)$$
$$\ldots - u(t-kT-T_w)]$$

- Integer, $k \in [-\infty, \infty]$
- Period of pulse train, T
- Period of pulse width, T_W

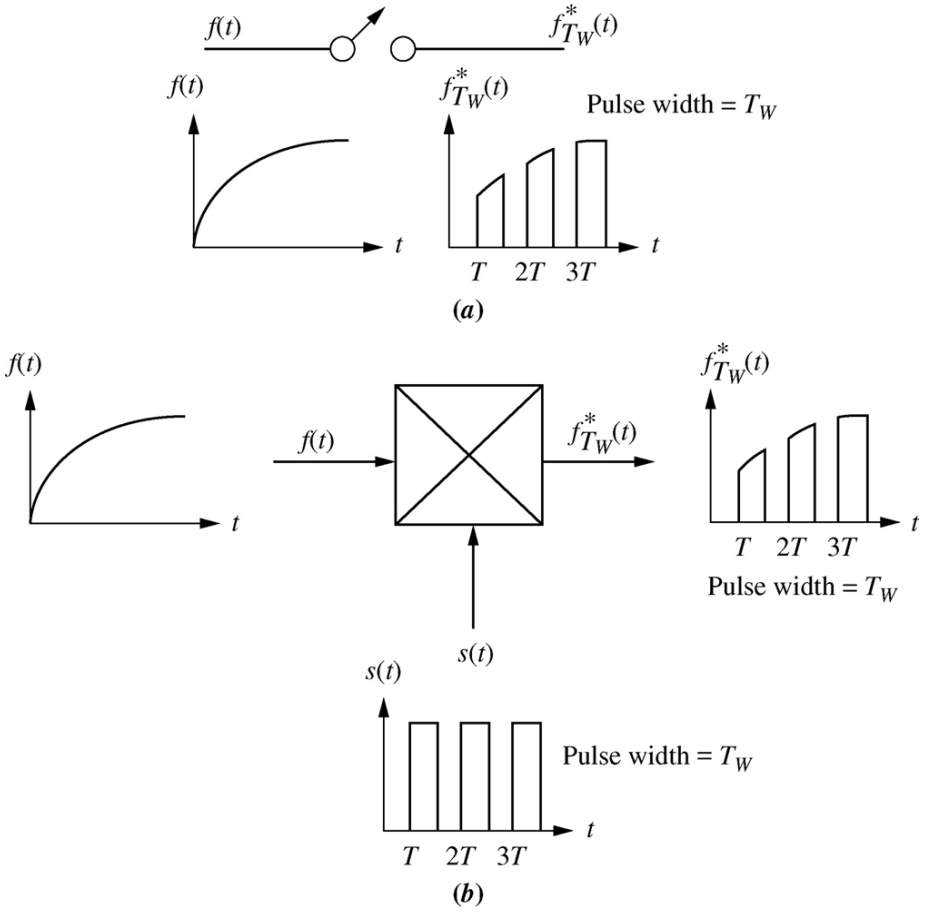

Figure: Views of uniform-rate sampling

Modeling the sampler, [1, p. 729]

Concept

- ...simplification & Laplace transform...
- Sampled waveform portion not dependent upon the sampling waveform characteristics

$$f^*(t) = \sum_{k=-\infty}^{\infty} f(kT)\delta(t - kT)$$

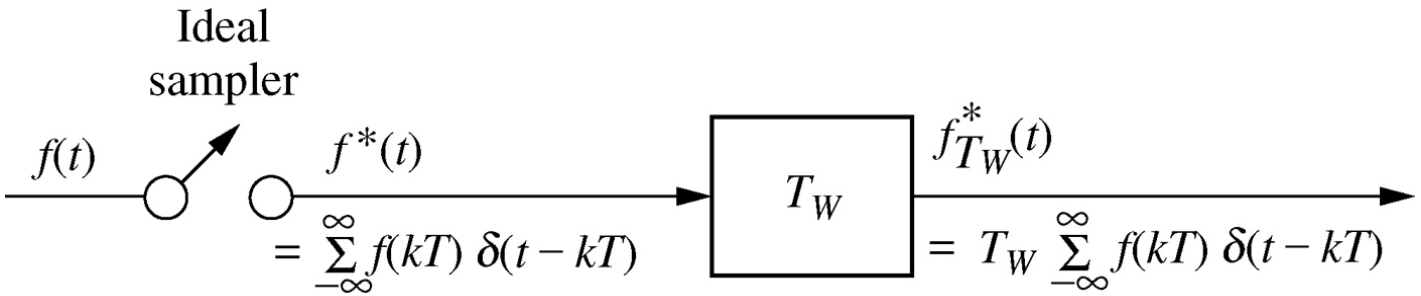

Figure: Modeling of sampling with a uniform rectangular pulse train

Modeling the ZOH, [1, p. 729]

Concept

- *Zero-order hold (ZOH):* Hold the last sampled value of $f(t)$ until the next sample
  - Staircase approximation to $f(t)$
  - Sequence of step functions whose amplitude is $f(t)$ at the sampling instant, or $f(kT)$
  - TF of the step that starts at $t = 0$ & ends at $t = T$

$$G_h(s) = \frac{1 - e^{-Ts}}{s}$$

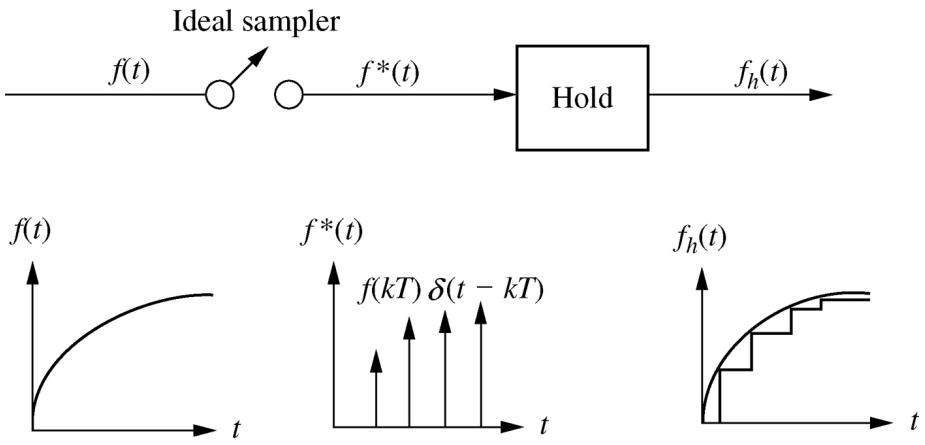

Figure: Ideal sampling & ZOH

Intro, [1, p. 730]

Concept

- Stability & TR of a sampled-data system depend upon sampling rate
- Laplace transform of the sampled time waveform

$$F^*(s) = \sum_{k=0}^{\infty} f(kT)e^{-kTs}$$

- Letting

$$z = e^{Ts}$$

- z-transform

$$F(z) = \sum_{k=0}^{\infty} f(kT)z^{-k}$$

$$f(kT) \leftrightarrows F(z)$$

z- & s-transforms, [1, p. 732]

$f(t)$	$F(s)$	$F(z)$	$f(kT)$
$\delta(t)$	1	1	
$u(t)$	$\frac{1}{s}$	$\frac{z}{z-1}$	$u(kT)$
$tu(t)$	$\frac{1}{s^2}$	$\frac{Tz}{(z-1)^2}$	kT
$t^n u(t)$	$\frac{n!}{s^{n+1}}$	$\lim_{a\to 0}(-1)^n \frac{d^n}{da^n}\left[\frac{z}{z-e^{-aT}}\right]$	$(kT)^n$
$e^{-at}u(t)$	$\frac{1}{s+a}$	$\frac{z}{z-e^{-aT}}$	e^{-akT}
$t^n e^{-at}u(t)$		$(-1)^n \frac{d^n}{da^n}\left[\frac{z}{z-e^{-aT}}\right]$	$(kT)^n e^{-akT}$
$\sin(\omega t)u(t)$	$\frac{\omega}{s^2+\omega^2}$	$\frac{z\sin(\omega T)}{z^2-2z\cos(\omega T)+1}$	$\sin(\omega kT)$
$\cos(\omega t)u(t)$	$\frac{s}{s^2+\omega^2}$	$\frac{z(z-\cos(\omega T))}{z^2-2z\cos(\omega T)+1}$	$\cos(\omega kT)$
$e^{-at}\sin(\omega t)u(t)$	$\frac{\omega}{(s+a)^2+\omega^2}$	$\frac{ze^{-aT}\sin(\omega T)}{z^2-2ze^{-aT}\cos(\omega T)+e^{-2aT}}$	$e^{-akT}\sin(\omega kT)$
$e^{-at}\cos(\omega t)u(t)$	$\frac{s+a}{(s+a)^2+\omega^2}$	$\frac{z^2-ze^{-aT}\cos(\omega T)}{z^2-2ze^{-aT}\cos(\omega T)+e^{-2aT}}$	$e^{-akT}\cos(\omega kT)$

z-transform theorems, [1, p. 733]

Name	theorem
Linearity	$\mathcal{Z}[c_1 f_1(t) + c_2 f_2(t)] = c_1 F_1(z) + c_2 F_2(z)$
Frequency shift	$\mathcal{Z}[e^{-aT} f(t)] = F(e^{aT} z)$
Time shift	$\mathcal{Z}[f(t - nT)] = z^{-n} F(z)$
Complex scale	$\mathcal{Z}[c^{-k} f(t)] = F(cz)$ where $c \in \mathbb{C}$
Complex differentiation	$\mathcal{Z}[t f(t)] = -Tz \frac{dF(z)}{dz}$
Real convolution	$\mathcal{Z}\left[\sum_{k=-\infty}^{\infty} f_1(kT) f_2(nT - kT)\right] = F_1(z) F_2(z)$
Initial value theorem	$f(0) = \lim_{z \to \infty} F(z)$
Final value theorem	$f(\infty) = \lim_{z \to 1} (z - 1) F(z)$

Note: t may be substituted for kT in the table

Definitions, [1, p. 733]

- *Inverse z-transform:* Sampled time function from its z-transform
  - Only yields the values of the time function at the sampling instants
  - Results in closed-form time functions that are *only valid at sampling instants*
  - 2 approaches
    - Partial-fraction expansion PFE
    - Power series

Approach – PFE, [1, p. 733]

Procedure

1. Sampled exponential time functions are related to their z-transforms

$$e^{-akT} \leftrightarrows \frac{z}{z - e^{-aT}}$$

2. Predict that a PFE should be of the following form

$$F(z) = \frac{Az}{z - z_1} + \frac{Bz}{z - z_2} + \dots$$

3. PFE of $F(s)$ did not contain terms with s in numerator of partial fractions
4. Form $\frac{F(z)}{z}$ to eliminate z terms in numerator
5. Perform a PFE of $\frac{F(z)}{z}$
6. Multiply the result by z to replace the zs in the numerator

Example, [1, p. 733]

Example (Inverse z-transform via PFE)

- *Problem:* Find the sampled time function

$$F(z) = \frac{0.5z}{(z-0.5)(z-0.7)}$$

- *Solution:* On the board

Approach – power series, [1, p. 734]

Procedure

- Values of the sampled time function found directly from $F(z)$
- Does not yield closed-form expressions for $f(kT)$

1. Indicated division yields a power series for $F(z)$
2. Transform power series for $F(z)$ into $F^*(s)$ and $f^*(t)$

Example, [1, p. 734]

Example (Inverse z-transform via power series)

- *Problem:* Find the sampled time function

$$F(z) = \frac{0.5z}{(z-0.5)(z-0.7)}$$

- *Solution:* On the board

TFs of sampled-data systems, [1, p. 736]

Concept

- The output is conceptually sampled in synchronization with the input by a phantom sampler

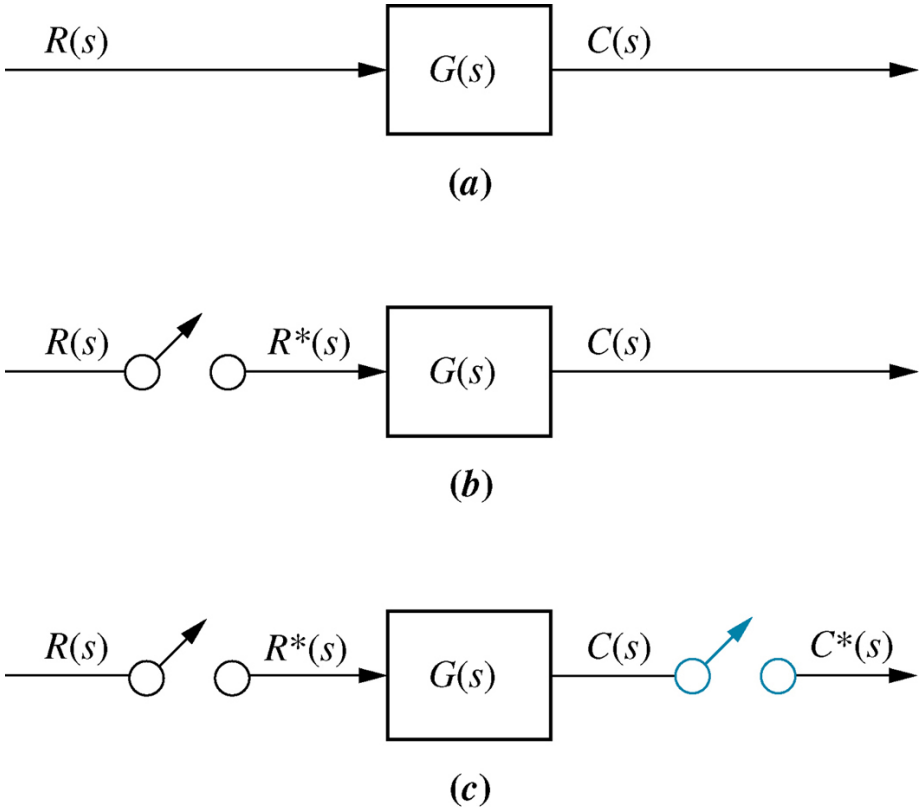

Note: Phantom sampler is shown in color.

Figure: Sampled-data systems: a. CT; b. sampled input; c. input & output

Pulse TF, [1, p. 736]

Concept

- Sampled input is a sum of impulses

$$r^*(t) = \sum_{n=0}^{\infty} r(nT)\delta(t - nT)$$

- Output

$$c(t) = \sum_{n=0}^{\infty} r(nT)g(t - nT)$$

- Sampled output

$$C(z) = \sum_{k=0}^{\infty} c(kT)z^{-k}$$

- ...substitution...
  - $t = kT$ and $m = k - n$

$$C(z) = G(z)R(z) = \sum_{m=0}^{\infty} g(mT)z^{-m} \sum_{n=0}^{\infty} r(nT)z^{-n}$$

Example, [1, p. 737]

Example (Converting $G(s)$ in cascade with ZOH to $G(z)$)

- *Problem:* Given a ZOH in cascade with the OL TF, $G(s)$, find the sampled-data TF, $G(z)$, if the sampling time, $T = 0.5$ seconds

$$\text{ZOH} = \frac{1 - e^{-Ts}}{s}; \quad G(s) = \frac{s+2}{s+1}$$

- *Solution:* On the board

Methodology, [1, p. 739]

Procedure

- Find the CL sampled-data TF of an arrangement of subsystems
- Be careful!
  - E.g. $z[G_1(s)G_2(s)] \neq G_1(z)G_2(z)$

1. Multiply s-domain functions before taking z-transform
2. Place a phantom sampler at the output of any subsystem that has a sampled input
   - Justification is that the output of a sampled-data system can only be found at the sampling instants, and the signal is not an input to any other block
3. Add phantom samplers at the input to summing junctions whose outputs are sampled
   - Justification is that the sampled sum is equivalent to the sum of the sampled inputs, and that all samples are synchronized
4. Use block diagram manipulations to yield isolated TFs with input and output samplers

Sampled-data systems, [1, p. 739]

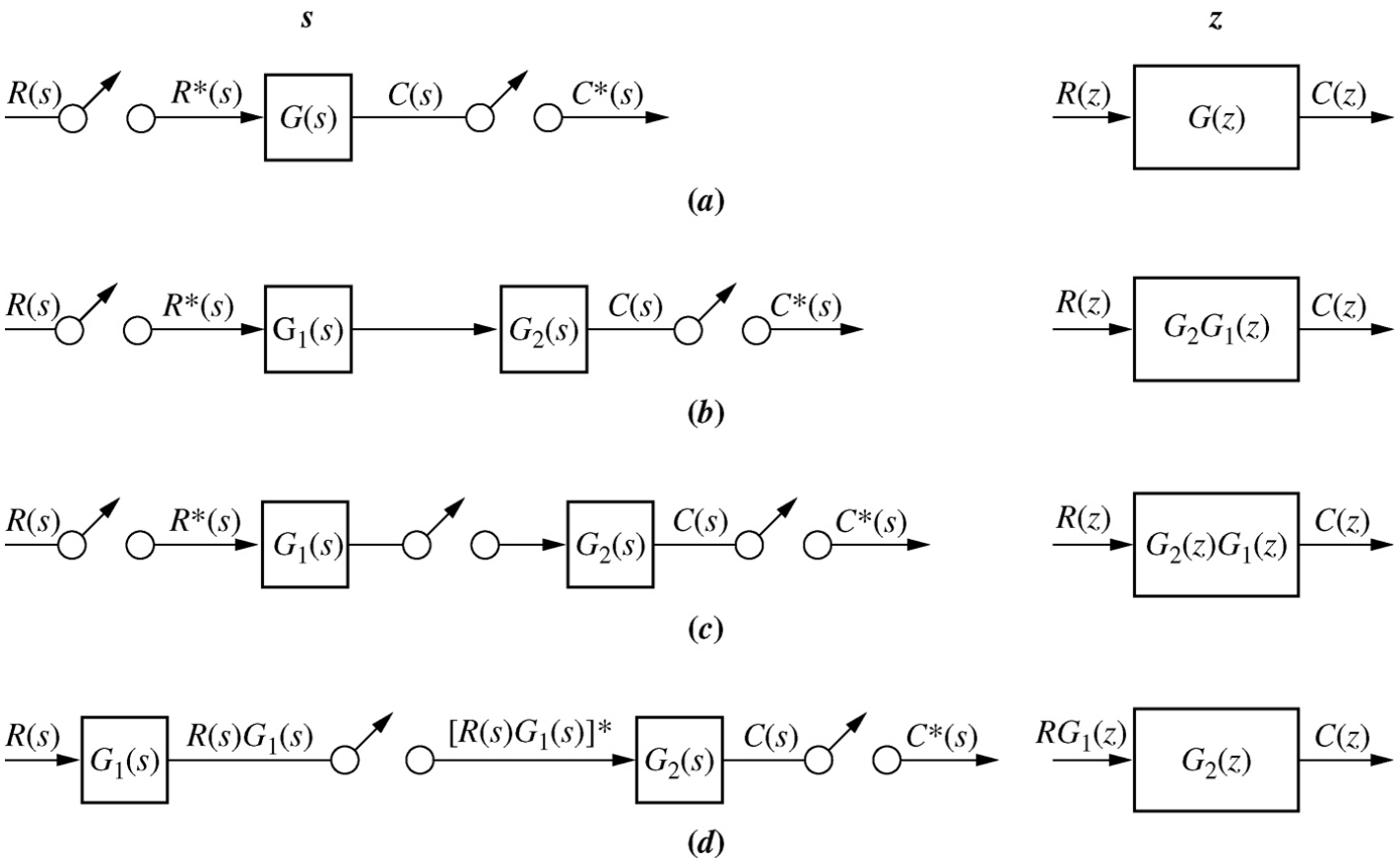

Figure: Sampled-data systems and their z-transforms

Example, [1, p. 740]

Example (Pulse TF of a FB system)

- *Problem:* Find the z-transform

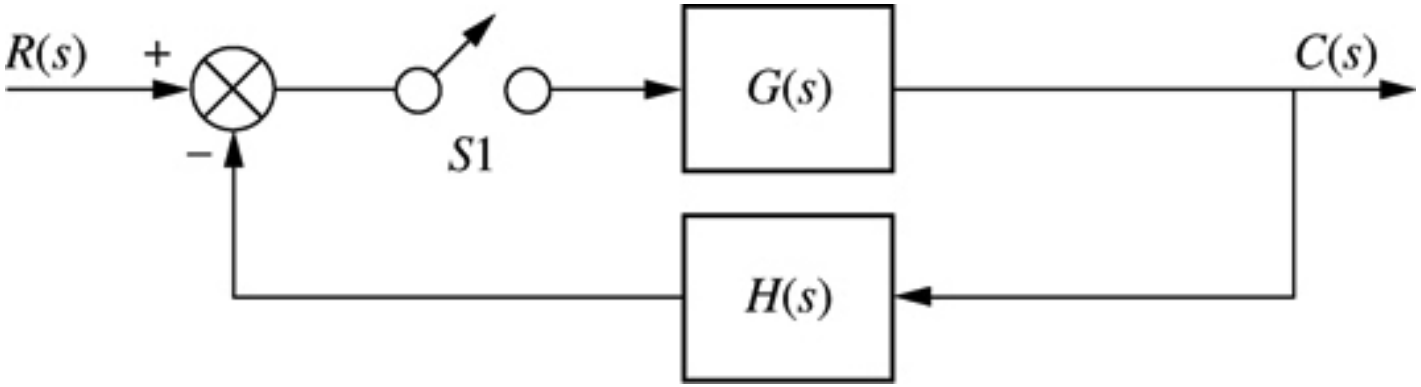

Figure: Sampled-data system

- *Solution:* On the board

Digital system stability via the z-plane, [1, p. 742]

Concept

- Sampling rate changes TR & stability
- Relate s-plane stability to z-plane stability
- Substitution of $z = e^{Ts}$ & $s = \alpha + j\omega$

$$
\begin{aligned}
z &= e^{T(\alpha + j\omega)} \\
&= e^{\alpha T} e^{j\omega T} \\
&= e^{\alpha T}(\cos(\omega T) + j\sin(\omega T)) \\
&= e^{\alpha T} \angle \omega T
\end{aligned}
$$

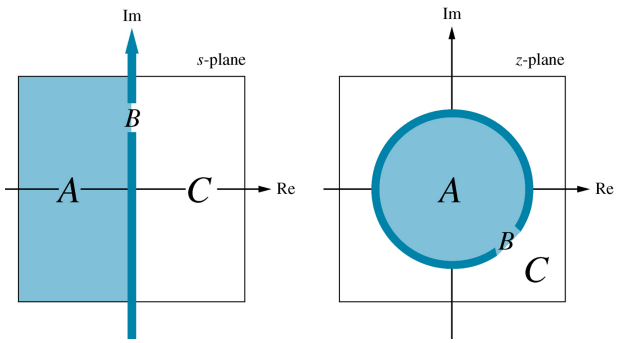

Figure: Mapping regions of s-plane onto z-plane

- s-plane regions $\rightarrow$ z-plane regions
  - RHP $\rightarrow$ region outside unit circle
  - $j\omega$-axis $\rightarrow$ unit circle
  - LHP $\rightarrow$ region inside unit circle

Digital system stability via the z-plane, [1, p. 743]

Concept

- Digital control system is
  - *Stable:* All CL poles are inside the unit circle
  - *Unstable:* Any pole is outside the unit circle and/or there are poles of multiplicity greater than 1 on the unit circle
  - *Marginally stable:* Poles of multiplicity 1 are on the unit circle and all other poles are inside the unit circle
- Tabular methods for determining stability, e.g., Routh-Hurwitz stability criterion, exist for sampled-data system
  - Raible's tabular method
  - Jury's stability test
  - Bilinear transformations $\rightarrow$ Routh-Hurwitz stability criterion

Example, [1, p. 745]

Example (Range of T for stability)

- *Problem:* Determine the ranges of the sampling interval, T, that will make the system stable and unstable

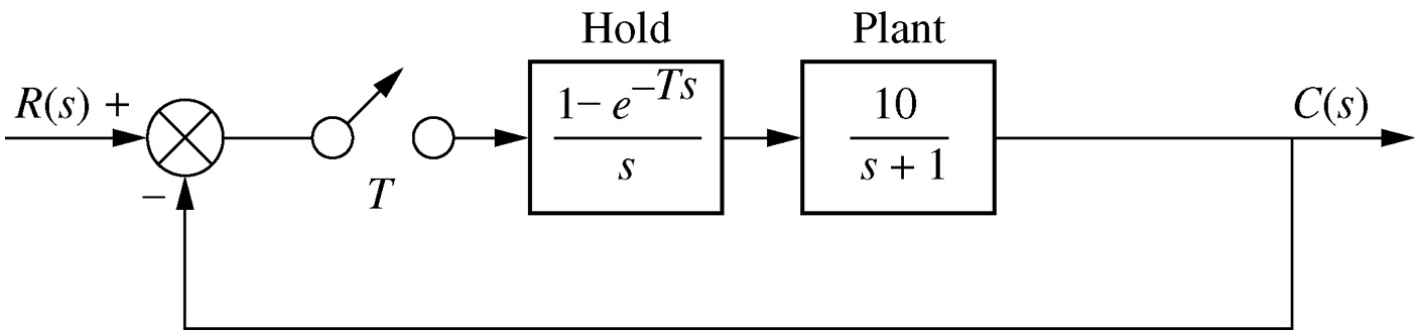

Figure: Digital system

- *Solution:* On the board

Bilinear transformations, [1, p. 746]

Concept

- *Exact transformations:*

$$z = e^{Ts} \quad \text{and} \quad s = \frac{\ln(z)}{T}$$

- *Bilinear transformations:* Mappings from the complex plane where one point, s, is mapped into another point, z, of the form

$$z = \frac{as + b}{cs + d} \quad \text{and} \quad s = \frac{-dz + b}{cz - a}$$

  - Allow application of s-plane analysis & design to digital systems
  - Yield linear arguments when transforming in both directions through direct substitution and without the complicated z-transform
  - Different values of a, b, c, & d have been derived for particular applications & yield various degrees of accuracy when comparing properties of continuous & sampled functions

Digital system stability via the s-plane, [1, p. 747]

Concept

- *Stability bilinear transformations:* Used to obtain stability information about the digital system by working in s-plane. The resulting TR of CT system, $G(s)$, is not same as that of DT system, $G(z)$.

$$s = \frac{z+1}{z-1} \quad \text{and} \quad z = \frac{s+1}{s-1}$$

  - s-plane regions $\rightarrow$ z-plane regions
    - $j\omega$-axis $\rightarrow$ points on unit-circle
    - RHP $\rightarrow$ points outside unit circle
    - LHP $\rightarrow$ points inside unit circle
  - Transforms the denominator of the pulsed TF, $D(z)$, to the denominator of a CT TF, $D(s)$, allowing the use of Routh-Hurwitz stability criterion

Example, [1, p. 748]

Example (Stability via Routh-Hurwitz stability criterion)

- *Problem:* Given the CL CE, $D(z)$, i.e. the denominator of the CL TF, $T(z)$, use Routh-Hurwitz stability criterion to find the number of z-plane poles $T(z)$ inside, outside, and on the unit circle. Is the system stable?

$$D(z) = z^3 - z^2 - 0.2z + 0.1$$

- *Solution:* On the board

Intro, [1, p. 749]

Concept

- For digital systems, the placement of the sampler changes the OL TF. Assume the typical placement of the sampler after the error and in the position of the cascade controller.
- Sampled error

$$E^*(s) = E(z) = \frac{R(z)}{1 + G(z)}$$

- Final value theorem for discrete signals

$$\begin{aligned} e^*(\infty) &= \lim_{z \to 1} \left(\tfrac{z-1}{z}\right) E(z) \\ &= \lim_{z \to 1} \left(\tfrac{z-1}{z}\right) \frac{R(z)}{1 + G(z)} \end{aligned}$$

Intro, [1, p. 750]

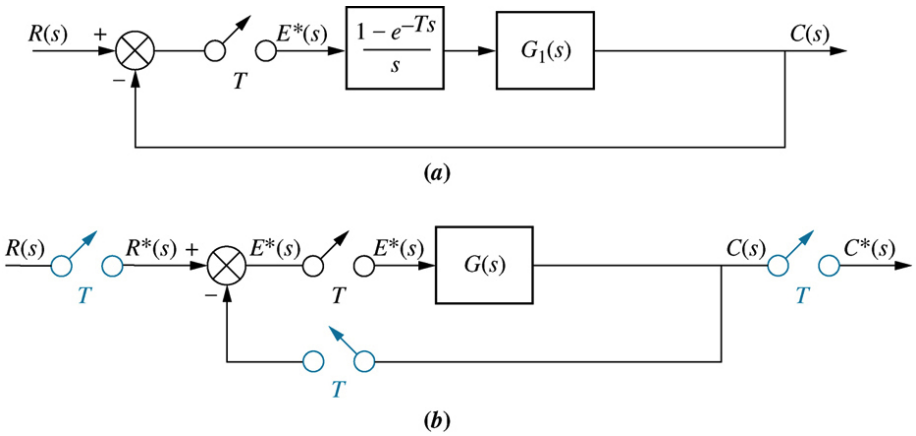

Figure: a. Digital FB control system for evaluation of steady-state errors; b. phantom samplers added

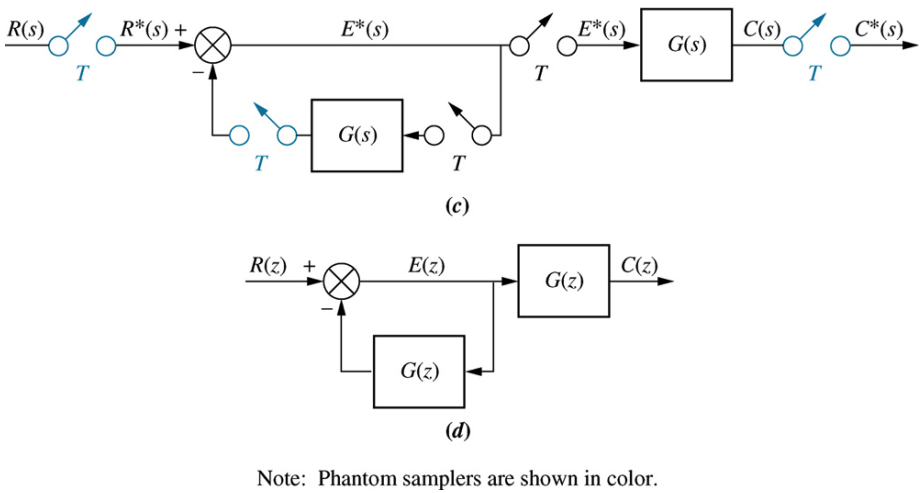

Figure: c. pushing G(s) and its samplers to the right past the pickoff point; d. z-transform equivalent system

Common inputs, [1, p. 750]

Table: Sampled steady-state error

Input	$R(s)$	$R(z)$	Static error constant	$e^*(\infty)$
Unit step	$\frac{1}{s}$	$\frac{z}{z-1}$	$K_p = \lim_{z\to 1} G(z)$	$\frac{1}{1+K_p}$
Unit ramp	$\frac{1}{s^2}$	$\frac{Tz}{(z-1)^2}$	$K_v = \frac{1}{T}\lim_{z\to 1}(z-1)G(z)$	$\frac{1}{K_v}$
Unit parabolic	$\frac{2}{s^3}$	$\frac{T^2 z(z+1)}{2(z-1)^3}$	$K_a = \frac{1}{T^2}\lim_{z\to 1}(z-1)^2 G(z)$	$\frac{1}{K_a}$

Note: Multiple pole placement at $z = 1$ reduces the steady-state error to zero

Example, [1, p. 752]

Example (Finding steady-state error)

- *Problem:* Find the steady-state error for step, ramp, and parabolic inputs

$$G(s) = \frac{10}{s(s+1)}$$

- *Solution:* On the board

Visual interpretation of the z-plane, [1, p. 753]

s-plane $\rightarrow$ z-plane

- Constant T_s
  - Constant real part, $\sigma = -\frac{4}{T_s}$
  - Vert. lines $\rightarrow$ conc. circles
  - $s = \sigma + j\omega \rightarrow z = re^{j\omega T}$
- Constant T_p
  - Constant im. part, $\omega = \frac{\pi}{T_p}$
  - Hori. lines $\rightarrow$ radial lines
  - $s = \sigma + j\omega \rightarrow z = e^{\sigma T} e^{j\theta}$
- Constant $\%OS$
  - Constant ζ, $\frac{\sigma}{\omega} = -\tan(\sin^{-1}(\zeta)) = -\frac{\zeta}{\sqrt{1-\zeta^2}}$
  - Radial lines $\rightarrow$ spiral lines
  - $s = \sigma + j\omega \rightarrow$ $z = e^{-\omega T\left(\frac{\zeta}{\sqrt{1-\zeta^2}}\right)} \angle \omega T$

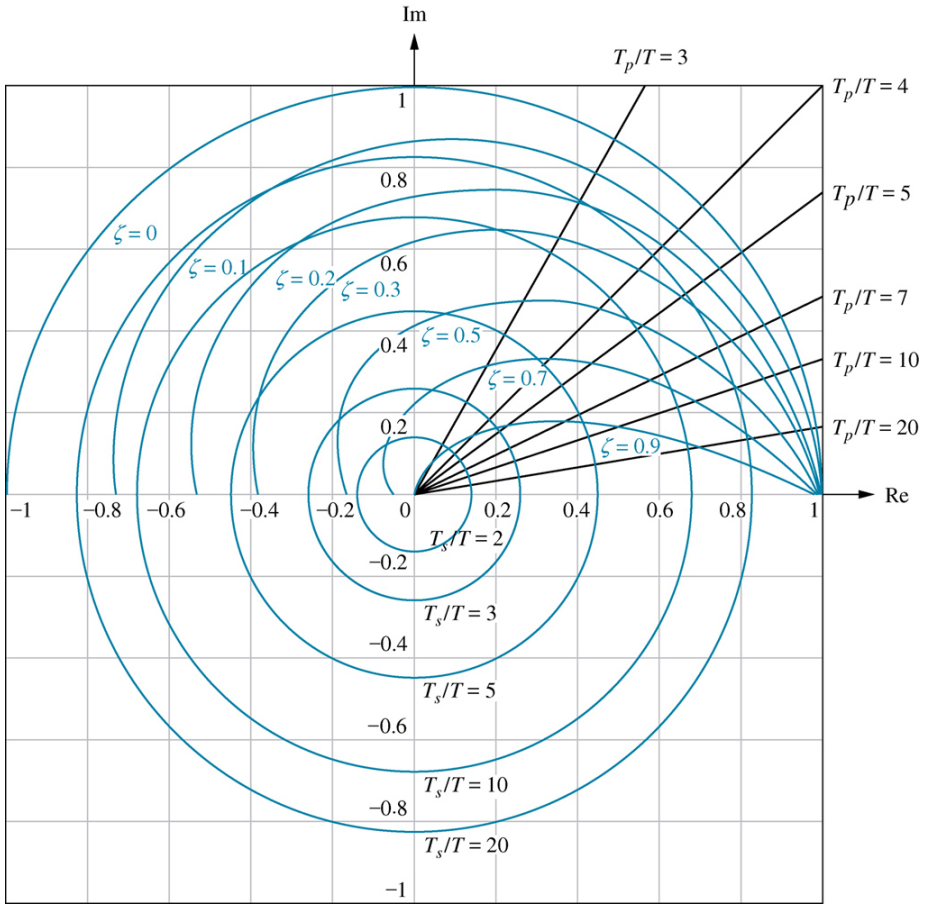

Figure: Constant ζ, normalized T_s, & normalized T_p plots on the z-plane

Digital system RL, [1, p. 755]

Concept

- Plot RL & determine gain for stability & TR requirement
- Same CT RL rules
- Stability divided by unit circle rather than imaginary axis
- Superimpose TR curves on z-plane
- Same drawback with CT RL, limited to simple gain adjustment to accomplish design objective
- Limitations solved with compensation

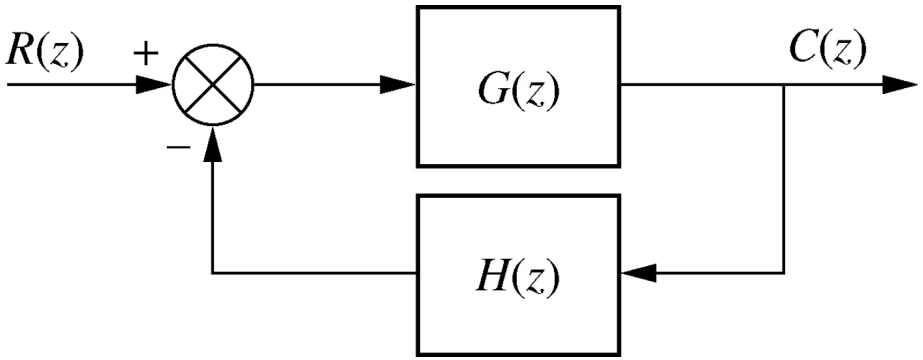

Figure: Generic digital FB control system

Example, [1, p. 755]

Example (Stability design via RL)

- *Problem:* Sketch the RL and determine the range of gain, K, for stability from the RL plot

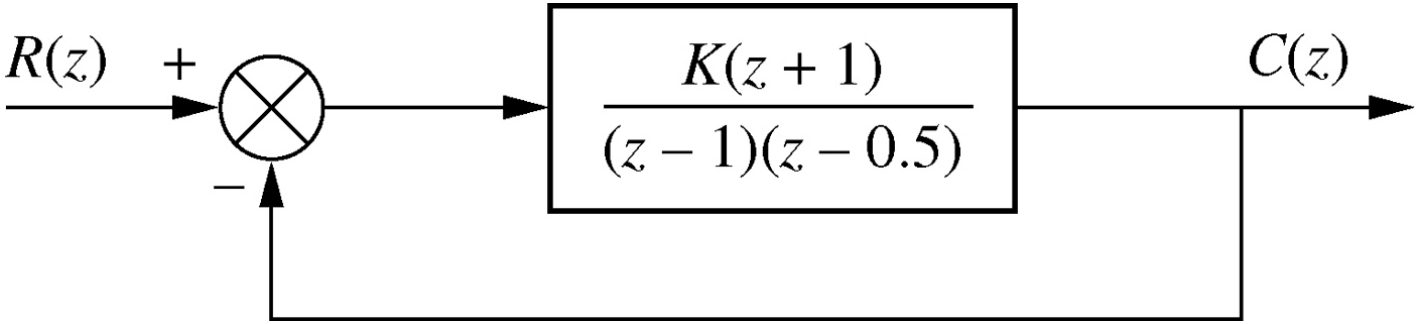

Figure: Digital FB control

- *Solution:* On the board

Example, [1, p. 756]

Example (Stability design via RL)

- *Problem:* Find the value of gain, K, to yield
  - $\zeta = 0.7$

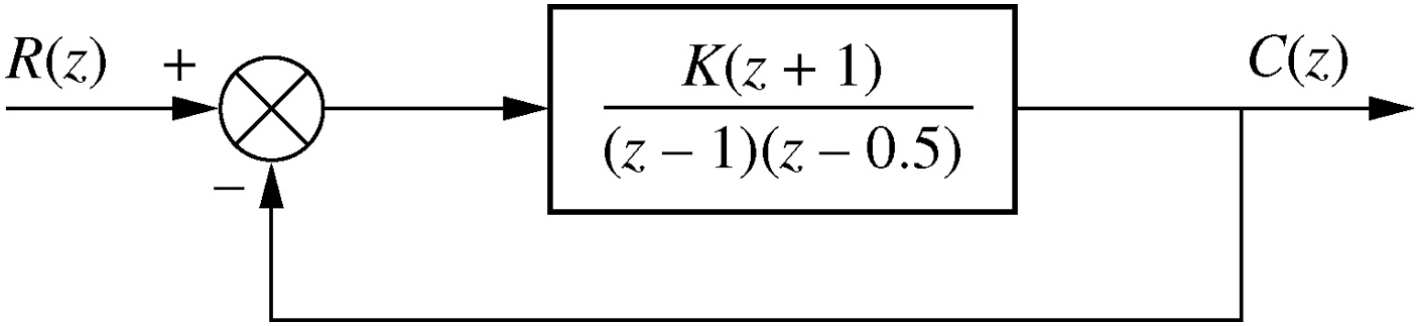

Figure: Digital FB control

- *Solution:* On the board

Intro, [1, p. 758]

Concept

- No design directly in the z-domain
  1. Design on the s-plane
  2. s-plane design $\rightarrow$ digital implementation, i.e., bilinear transformation
  3. Apply cascade compensator
- *Tustin transformation:* Bilinear transformation that can be performed with hand calculations & yields a DT TF whose output response at sampling instants is approximately same as equivalent CT TF

$$s = \frac{2(z-1)}{T(z+1)} \quad \text{and} \quad z = -\frac{s+\frac{2}{T}}{s-\frac{2}{T}} = \frac{1+\frac{T}{2}s}{1-\frac{T}{2}s}$$

  - $\downarrow T \rightarrow$ DT compensator $\approx$ CT compensator
  - $\uparrow T \rightarrow$ discrepancy higher frequencies

DT compensator design notes, [1, p. 759]

- Selecting the sampling interval, T
  - *Astrom & Wittenmark, 1984*

$$T \approx \frac{0.15}{\omega_{\Phi_M}} \text{ to } \frac{0.5}{\omega_{\Phi_M}}$$

    - Where ω_{Φ_M} is the 0 dB frequency (rad/s) of the magnitude frequency response curve for the cascaded CT compensator & plant
  - *Rule of thumb*

$$T \approx \frac{10}{\omega_{BW}} \text{ to } \frac{20}{\omega_{BW}}$$

    - Where ω_{BW} is the frequency at which the magnitude frequency response is -3 dB below the magnitude at 0 frequency

Example, [1, p. 760]

Example (Digital cascade compensator design)

- *Problem:* Design a digital lead compensator in the s-domain and transform the compensator to the z-domain

$$G_p(s) = \frac{1}{s(s+6)(s+10)}$$

  - $\%OS = 20\%$
  - $T_s = 1.1$ seconds
- *Solution:* On the board

Algorithm to emulate the compensator, [1, p. 762]

Concept

- 2nd-order example
  - Compensator

$$G_c(z) = \frac{X(z)}{E(z)} = \frac{a_3 z^3 + a_2 z^2 + a_1 z + a_0}{b_2 z^2 + b_1 z + b_0}$$

  - ...cross multiply, solve for $X(s)$, inverse z-transform...

$$\begin{aligned} x^*(t) =& \frac{a_3}{b_2} e^*(t+T) + \frac{a_2}{b_2} e^*(t) + \frac{a_1}{b_2} e^*(t-T) + \frac{a_0}{b_2} e^*(t-2T) \\ & - \frac{b_1}{b_2} x^*(t-T) - \frac{b_0}{b_2} x^*(t-2T) \end{aligned}$$

- To be physically realizable
  - Present sample of compensator output, $x^*(t)$, cannot be a function of future sample of error, $e^*(t+T) \rightarrow a_3 = 0$
  - Compensator TF numerator order $\leq$ denominator order

Intro, [1, p. 763]

Concept

- The output is a weighted linear combination of several successive values of the input & output

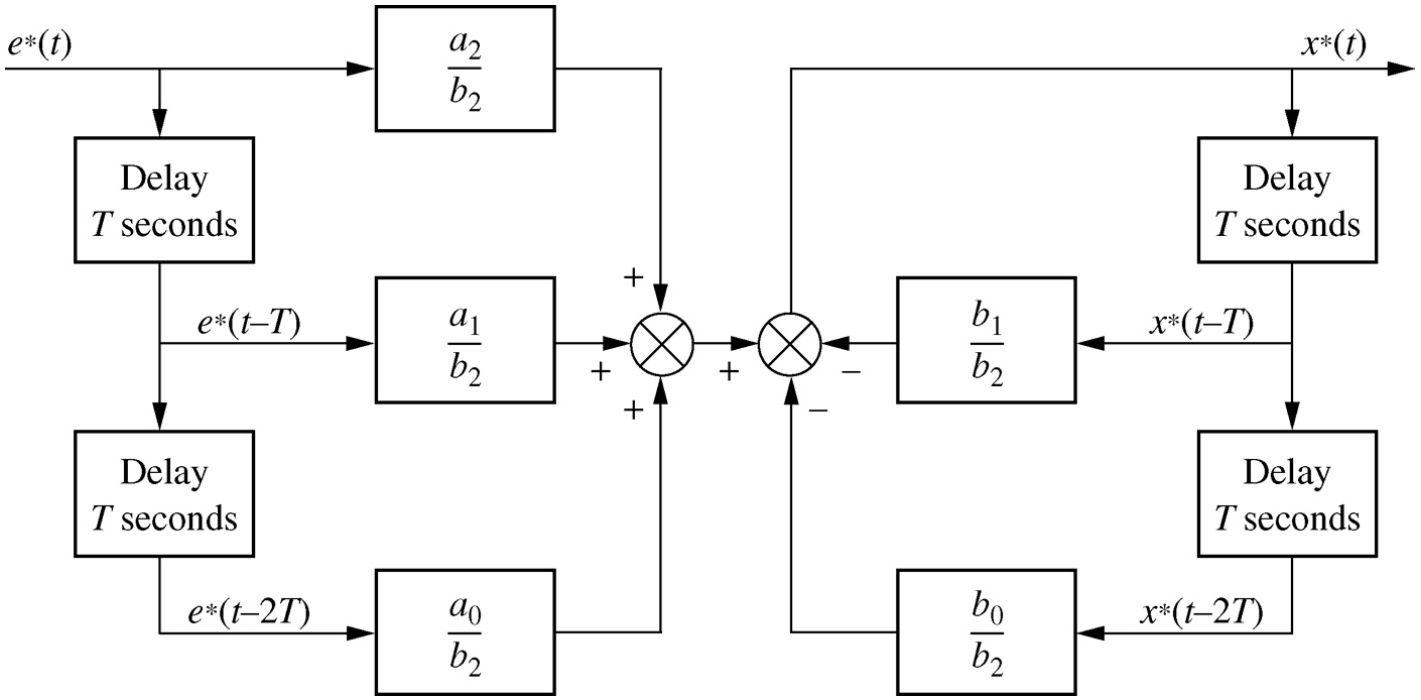

Figure: Flowchart for a 2nd-order DT compensator

Example, [1, p. 764]

Example (Digital cascade compensator implementation)

- *Problem:* Develop a block diagram for the digital compensator

$$G_c(z) = \frac{X(z)}{E(z)} = \frac{z + 0.5}{z^2 - 0.5z + 0.7}$$

- *Solution:* On the board

Bibliography

Norman S. Nise. *Control Systems Engineering*, 2011.